HIGH STANDARD®
SPORTING FIREARMS

HIGH STANDARD SPORTING FIREARMS • 1817 DIXWELL AVENUE, HAMDEN, CONNECTICUT 06514
A DIVISION OF THE LEISURE GROUP, INC.

PARTS BREAKDOWN

TARGET PISTOLS

Supermatic Tournament — Supermatic Citation — Supermatic Trophy
Olympic and Victor Models
MILITARY MODEL 107 SERIES

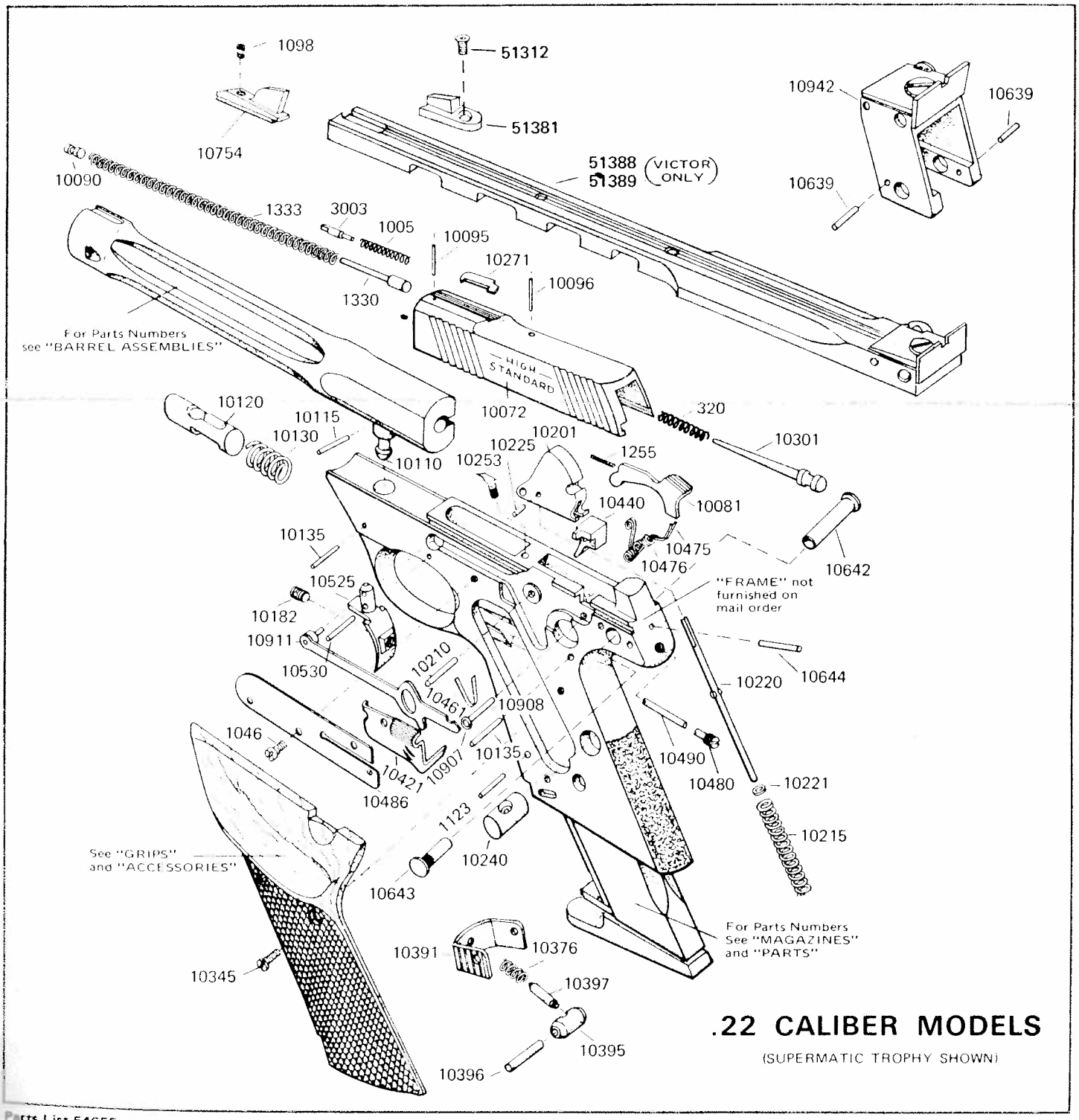

.22 CALIBER MODELS

(SUPERMATIC TROPHY SHOWN)

Printed in U.S.A.